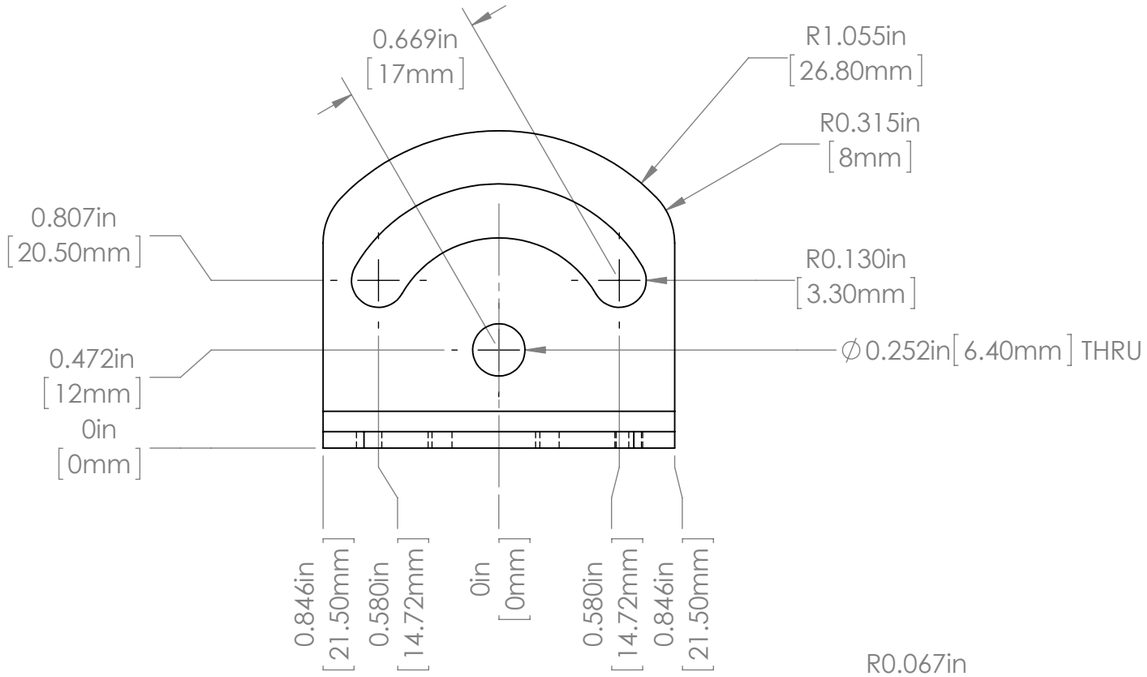

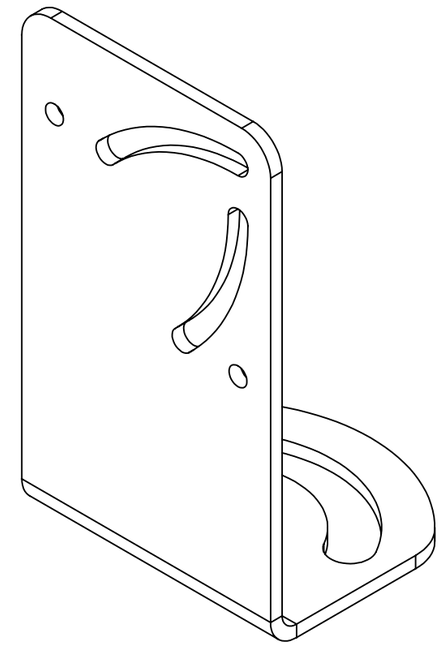

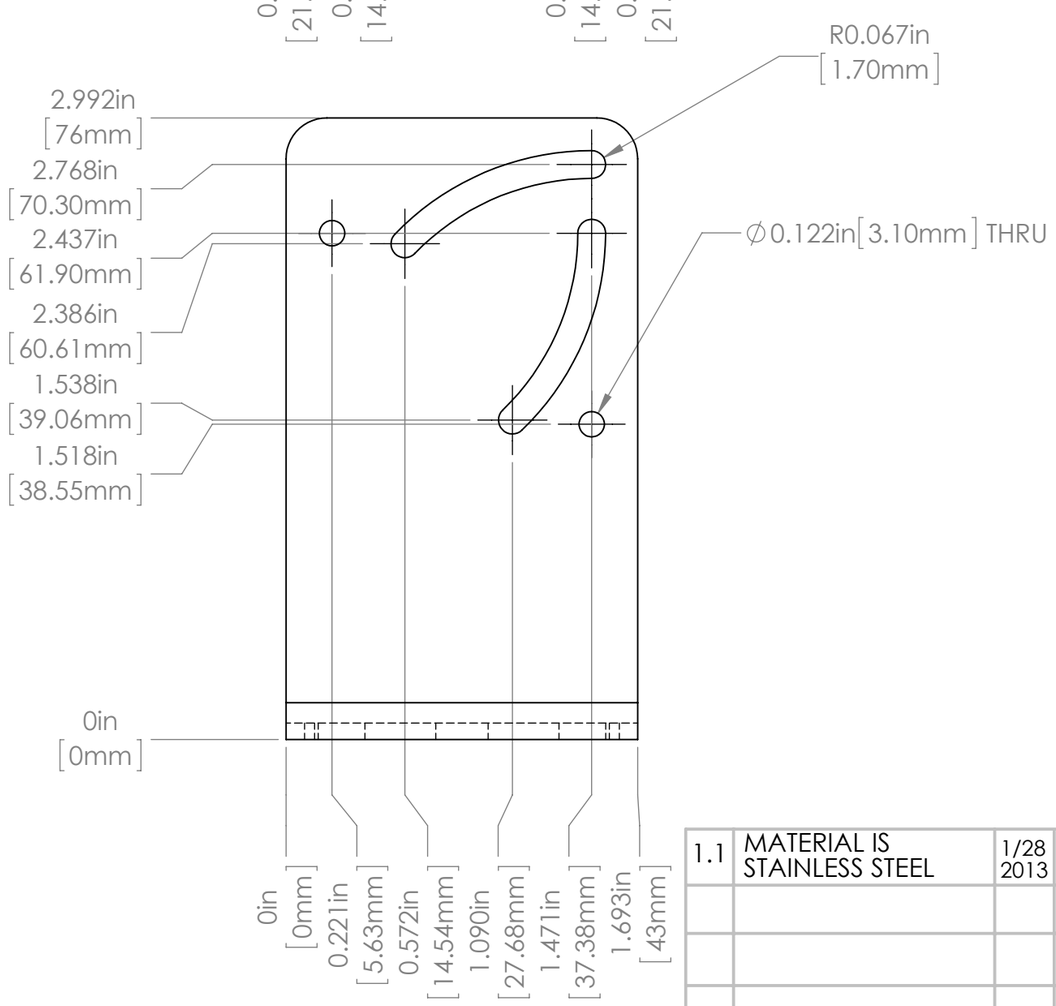

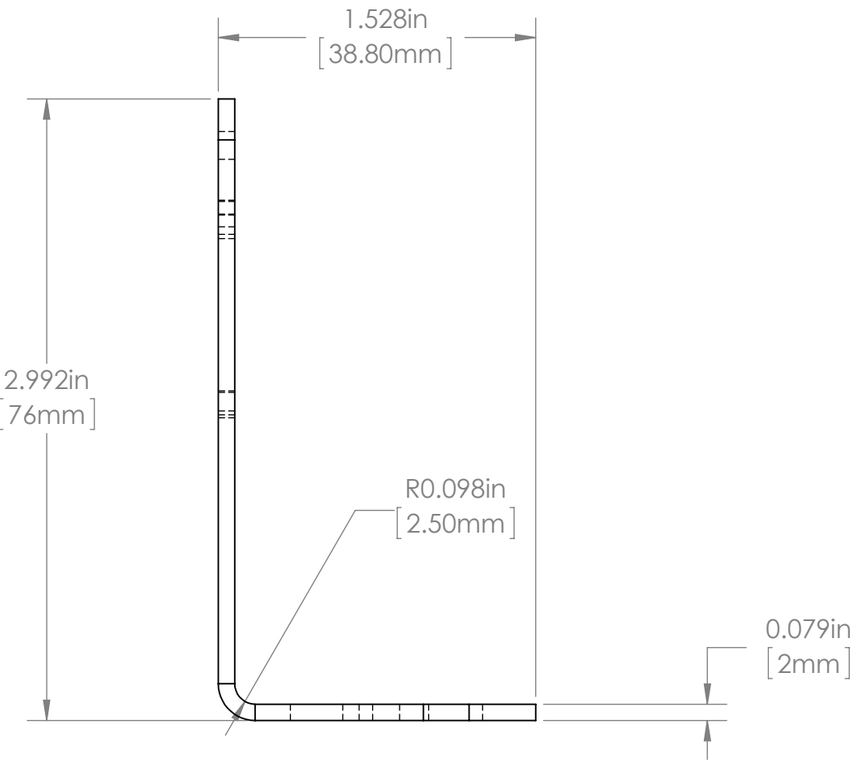

NO.	CHANGE	DATE	INIT.
1.1	MATERIAL IS STAINLESS STEEL	1/28 2013	R.S.

UNLESS OTHERWISE SPECIFIED:
DIMENSIONS ARE IN INCHES
SURFACE FINISH:
TOLERANCES: .000= +/- 0.005"
.00= +/- 0.010"
LINEAR:

FINISH: BURNISHED

DEBUR AND BREAK SHARP EDGES

	NAME	SIGNATURE	DATE
DRAWN	SCHUBERT		1/28/2013
CHK'D			
APPV'D			
MFG			
Q.A			

NOTES:
MATERIAL THICKNESS
14 GAUGE (0.080")

Allison Park Group, Inc. (APG)
4055 Alpha Drive
Allison Park, PA 15101 USA

Phone +1 (412) 487-8211
Fax +1 (412) 486-3157

www.apgvision.com

MATERIAL:
304 STAINLESS STEEL

WEIGHT:

DO NOT SCALE DRAWING

REVISION R 1.1

This document is the property of APG and is considered company confidential. The information in this document is the property of APG and may not be used, reproduced, or distributed in whole or in part without the prior written permission of APG

TITLE:
MB-AB (DM50)

DWG NO. MB-AB

A3

SCALE:4:1

SHEET 1 OF 2

Saved on Monday, January 28, 2013 11:27:14 AM

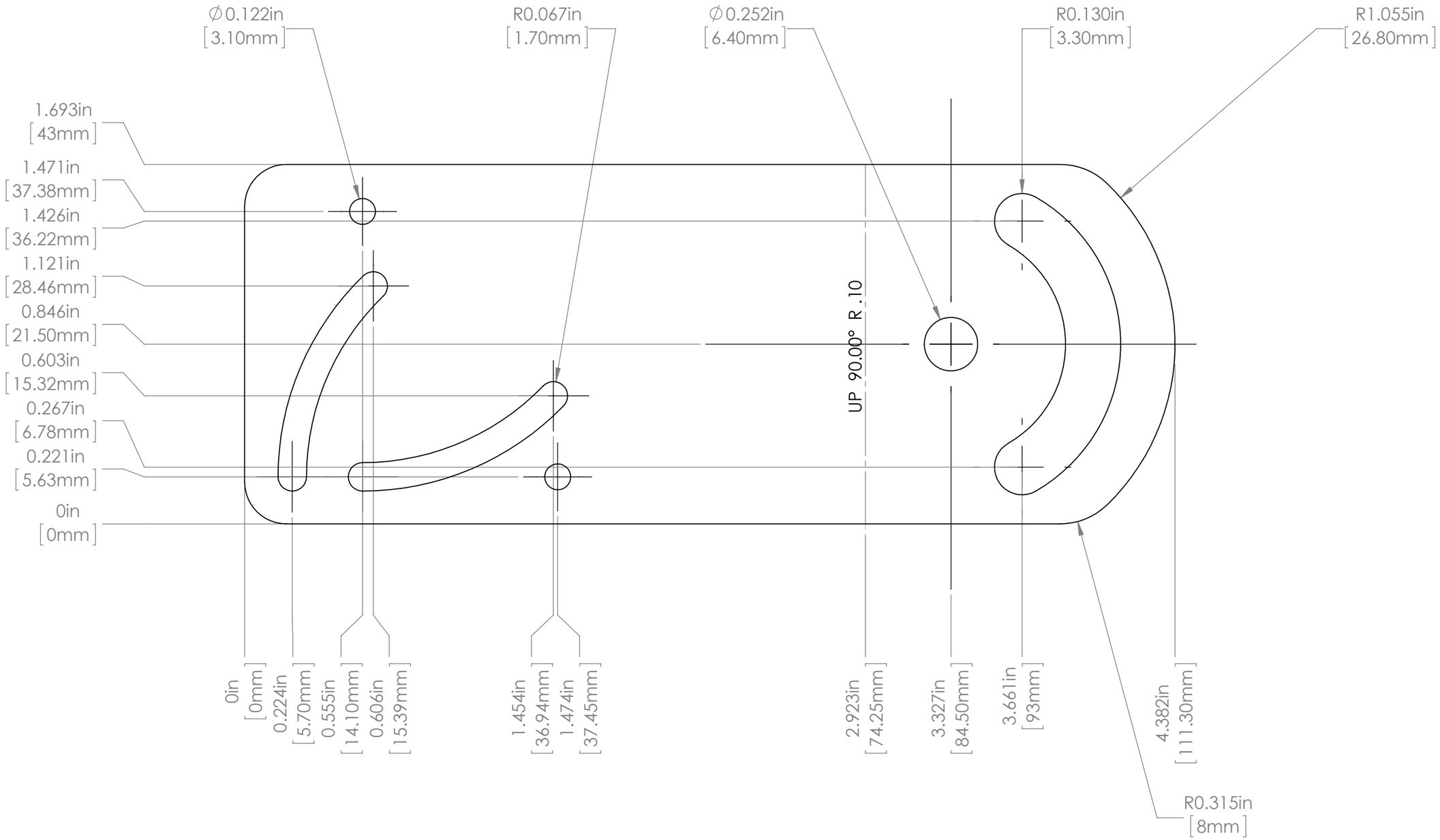

1.1	MATERIAL IS STAINLESS STEEL	1/28 2013	R.S.	UNLESS OTHERWISE SPECIFIED: DIMENSIONS ARE IN INCHES SURFACE FINISH: TOLERANCES: .000= +/- 0.005" .00= +/- 0.010" LINEAR:	FINISH: BURNISHED	DEBUR AND BREAK SHARP EDGES	
					NAME	SIGNATURE	DATE
				DRAWN	SCHUBERT		1/28/2013
				CHK'D			
				APPV'D			
				MFG			
				Q.A			
				NOTES: MATERIAL THICKNESS 14 GAUGE (0.080")			
NO.	CHANGE	DATE	INIT.				

Allison Park Group, Inc. (APG)
4055 Alpha Drive
Allison Park, PA 15101 USA

Phone +1 (412) 487-8211
Fax +1 (412) 486-3157

www.apgvision.com

MATERIAL: 304 STAINLESS STEEL

WEIGHT:

DO NOT SCALE DRAWING

REVISION R 1.1

This document is the property of APG and is considered company confidential. The information in this document is the property of APG and may not be used, reproduced, or distributed in whole or in part without the prior written permission of APG

TITLE: MB-AB (DM50)

DWG NO. MB-AB

A3

SCALE:4:1

SHEET 2 OF 2

Saved on Monday, January 28, 2013 11:27:14 AM