Edmund Optics TML™ Telecentric Measuring Lenses

- Designed for Metrology and Gauging Applications
- Economical
- Exceptional Image Quality
- Fixed Focus
- 1/2" CCD Max Format Design
- Ideal for Factory Automation

Telecentric lenses correct perspective errors that yield variations in magnification through the depth of field. TML™ lenses offer a compact, cost-effective solution for replacing standard fixed focal length lenses. Telecentric lenses are ideal for both on-line and off-line production environments that require accurate measurements. Edmund has designed this series of lenses to specifically replace lenses that give inaccurate or inconsistent readings.

TML™ lenses offer superior image quality and less distortion than conventional fixed focal length lenses. This design yields more symmetrical images that are superior for software-integrated measurements.

Each lens also has a standard front filter thread. Two different, unique twin-ring mounting clamps are available separately. Each mounting clamp has the same twin-ring clamp design that fits on the 30mm diameter mounting surface. One offers a 1.75" (dimension A in diagram below, center of TML™ to bottom of mounting clamp base) stand-off distance that is ideal for 0.60X through 0.25X TML™s. The 2.25" stand-off version is ideal for the larger 0.20X and 0.16X TML™s. Bases have a variety of 1/4-20 tapped and clearance holes.

Primary Magnification	2.0X
Working Distance (±3mm)	75mm
DOF (10% @ 20lp/mm, F10)	±0.13mm
Weight (lens only)	350g
Stock Number	LEC-58431

Common Specifications	
Max. CCD Format	1/1.8"
Aperture (f/#)	F6 - Closed
Resolution (image space @ F10)	>40% at 40lp/mm
Telecentricity	<0.1°
Distortion	<0.3%
Lens Element Coating	BBAR from 425-675nm

PMag	A	B	C	D	E	F
2.0X	45mm	30mm	141mm	45mm	17mm	M43 x 0.75

Field of View and Res. Table	IN-SIGHT				DVT Vision Sensors		
0.60X TML	5000	5100, 5400, 5400C, 5400S	5401	5403	542C, 552C	515, 535, 545, 550, XS	554, 554C
FOV in mm	1.79	2.37	2.38	3.52	1.79	2.37	2.98
Res. per pixel in microns	2.80	3.70	2.33	2.20	2.80	3.70	2.33
FOV in inches	0.09	0.09	0.09	0.14	0.09	0.09	0.12
Res. per pixel in inches	0.0001	0.0001	0.0001	0.0001	0.0001	0.0001	0.0001

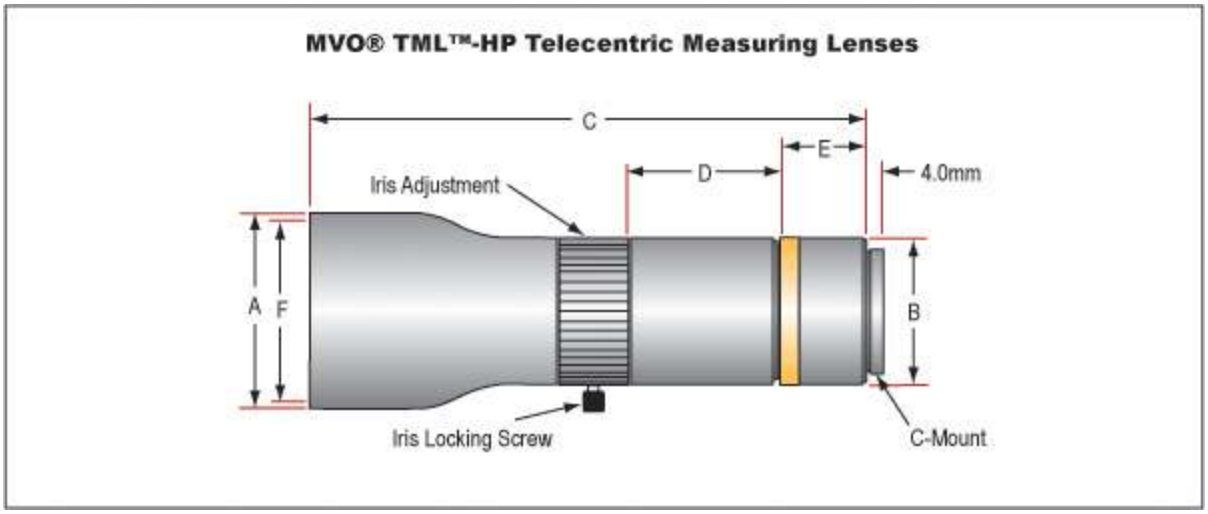
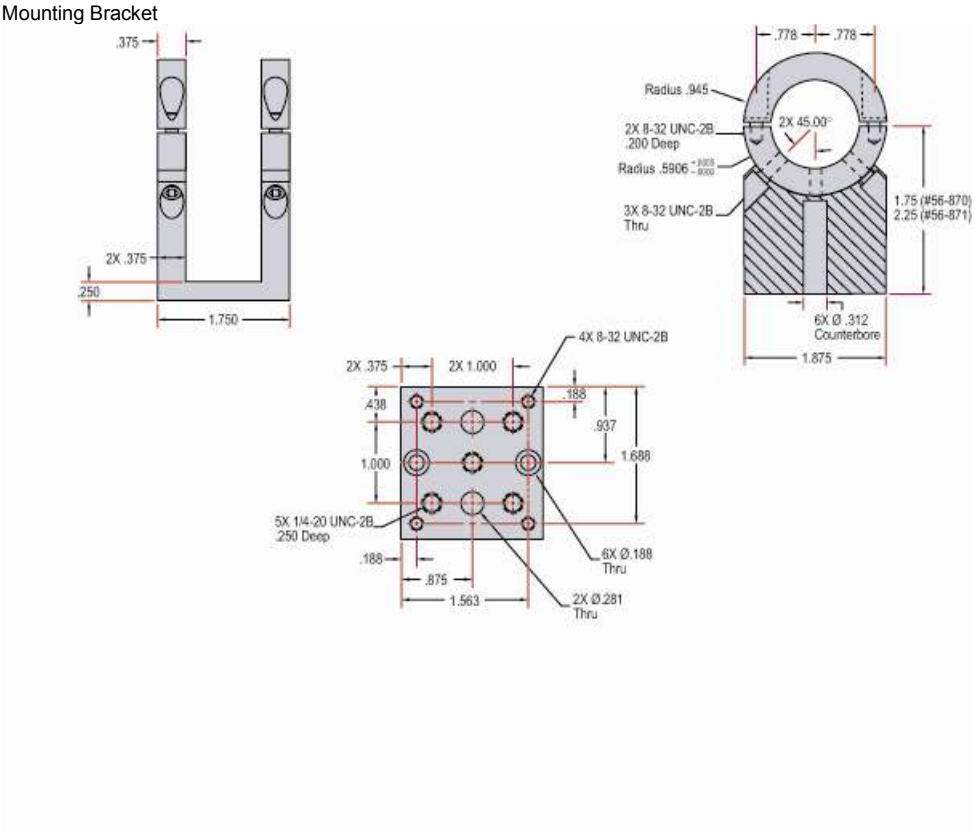
Mounting Bracket